IN THE SHADE

IN THE SHADE:
LIGHTING LOCAL URBAN COMMUNITIES

Megan Charnley and Tom Jarvis

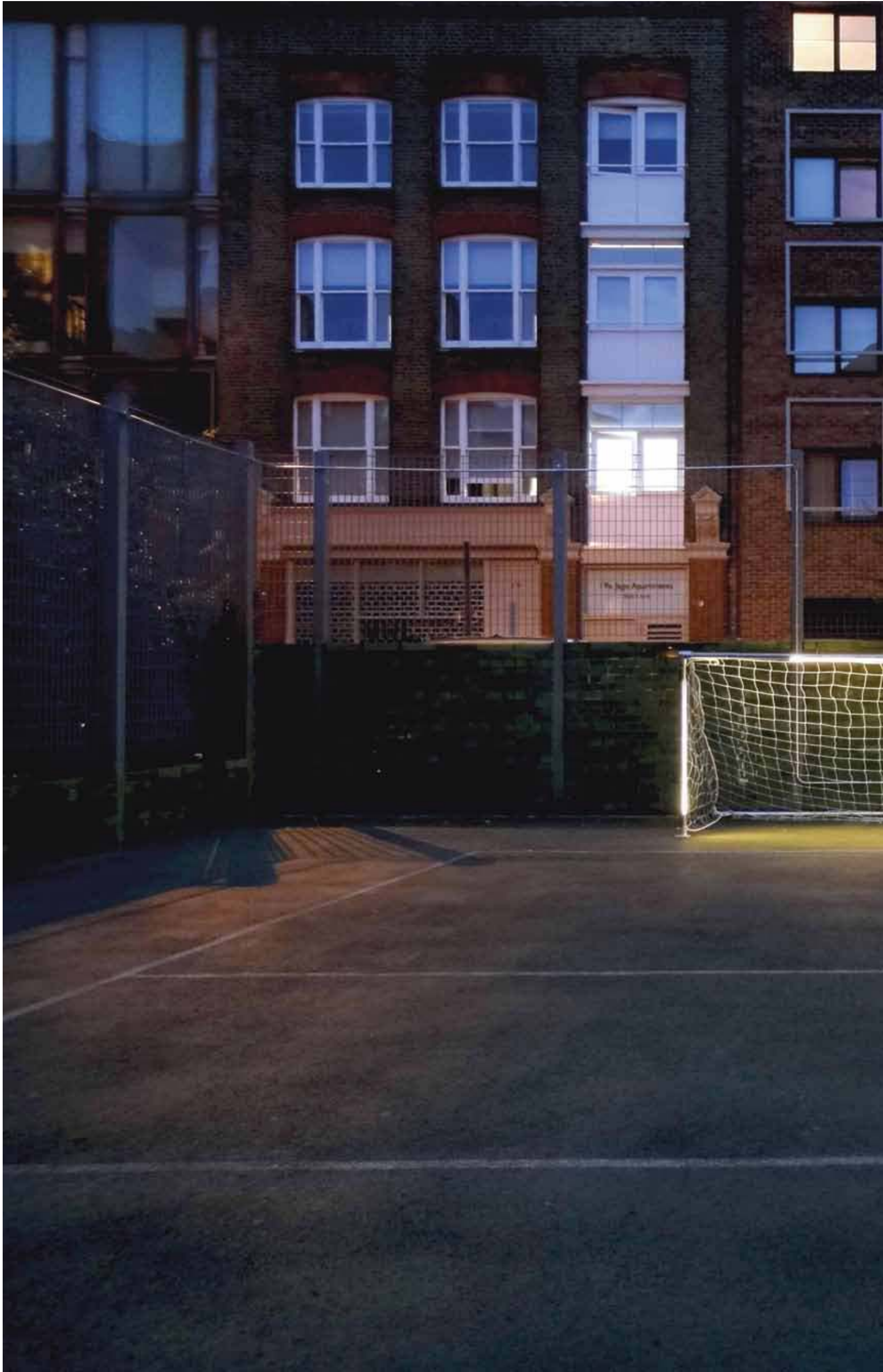



IN THE SHADE

IN THE SHADE:
LIGHTING LOCAL URBAN COMMUNITIES

Megan Charnley and Tom Jarvis

FOREWORD

The importance of good lighting in the urban environment cannot be underestimated. Not only can it help us feel safe and secure but also make a significant contribution to social cohesion and economic progress.

Ever since the industrialisation of light in Britain at the end of the 19th century we have always employed the very latest technology to help extend the day. Whilst this was initially done through limited but organised systems of gas lighting, the on-going development of electric light in the 20th century enabled us not only to illuminate all our streets but also buildings, bridges, monuments, landscaped areas, signs and billboards – the very fabric of our cities – and all on a grand scale. This has had the effect of making the public realm ever more visible and accessible after dark, profoundly changing the way we use both public and private space, particularly during the winter months.

The rapid development of urban lighting has brought many positive benefits, but such change has come with consequences. Not only have we seen the skies become polluted with light, blocking out the view of night sky and creating unwanted impacts on bio-diversity, but with growing concerns about climate change lighting has come into sharp focus as a considerable consumer of energy. Indeed the impact of 'over-illumination' is now under scrutiny and questions have begun to be asked as to why we need to use so much light and what the long-term effect will be on our wellbeing.

The value of darkness is also in the process of being carefully reassessed. We have seen lighting used to great effect in our city centres, but the same cannot always be said for outlying districts and residential neighbourhoods where systemic under-investment and poor practice has resulted in a perception that the streets are not always a safe place to be after dark.

With the shift from more traditional forms of electric lighting such as incandescent, fluorescent and discharge lighting to the solid-state world of light-emitting diodes (LEDs), the possibility of not only creating high quality public lighting whilst using considerably less energy but also better directing and controlling that light, offers new and exciting possibilities.

To that end the research and development being carried out into this area by the RCA's Helen Hamlyn Centre for Design and Megaman, as represented by this book, is most timely in that it addresses some very fundamental questions.

How can light be used more progressively in the public realm, and in particular in our neighbourhoods? How can we create a truly sustainable approach to lighting development in which we realise the social and economic benefits good lighting can bring whilst mitigating the environmental impacts? How do we use rapidly advancing lighting technology to create new, exciting, useful and viable products that can help move us away from the purely functional delivery of light? And how can we create a better understanding around the subject of light?

By addressing the issue of urban lighting in a truly holistic manner and choosing to focus on the problems of a specific area of London, Megan Charnley and Tom Jarvis have not only helped to address many of these questions but have done so through a system of proper community engagement. As a result they have not only given us a fascinating insight into the general issues surrounding this subject but have also exposed some of the prevailing attitudes towards both light and darkness in one of that city's tougher neighbourhoods.

Their highly imaginative response goes well beyond the conventional approach, providing a new benchmark for progressive thinking about urban light and inviting us to carry out further investigation. Most importantly, however, they show us how we might make real progress through using light as a tool for creating proper places for people after dark.

MARK MAJOR RIBA, IALD PLDA FRSA
DIRECTOR AND FOUNDING PARTNER, SPEIRS + MAJOR

INTRODUCTIONS

Lighting has a vital role to play in building and supporting urban communities that are sustainable – socially, environmentally and economically. This publication describes a design research project supported by the Megaman Charity Trust Fund that investigates the condition of poorly lit inner-city areas – and designs and tests an innovative lighting solution on a local housing estate.

This is the second project on which we have collaborated with the Helen Hamlyn Centre for Design at the Royal College of Art, London. The first, *Light Volumes Dark Matters* by Claudia Dutson, looked at over-illumination of commercial interiors; we are also planning a third study with the RCA to explore the future of lighting for learning environments.

The Megaman Charity Trust Fund was established in February 2008 to support programmes and projects specialising in education and environmental protection. Megaman is a leading designer, manufacturer and marketer of innovative lighting solutions and equipment. It is probably best known for its pioneering work on innovative designs of CFLs and LEDs that enable the replacement of less efficient light sources in a wide range of applications.

We greatly value our partnership with the Helen Hamlyn Centre for Design as it encourages us to look at lighting from a broader social perspective. I have been impressed with the ability of architectural researcher Megan Charnley to reach out to community groups and with the expertise of industrial designer Tom Jarvis in developing Megan's hypothesis for a Night-Time Neighbourhood Network into a working light system. Together they have produced a compelling publication that I hope will be widely read by those who design and commission urban lighting schemes.

SHARON PANG
MEGAMAN CHARITY TRUST FUND

Lighting design and its effect on individuals and communities has been a long-term research preoccupation of the Helen Hamlyn Centre for Design. That because light is so fundamental to our visual experience of the world and a major factor in determining quality of life.

Our cities are now light-filled places but the distribution of lighting is uneven. If you've ever walked quickly at night from the reassurance of a brightly lit shopping street or business district to a poorly lit residential area or housing estate, which immediately fills you with a sense of foreboding as you move through it, then you'll know what I'm talking about.

Such a transition can be made between the well-heeled City of London and the historic Boundary Estate just a stone's throw away. The change in lighting reflects the inequalities between very different communities. The Boundary Estate is the setting for the design project, *In the Shade*, described in this publication. But, as researchers Megan Charnley and Tom Jarvis point out, it is also a proxy for overlooked and under-lit inner-city communities all over the UK.

In the Shade not only demonstrates how light – or lack of it – can be a divisive issue in residential areas that are shared by diverse communities but also points to a future in which new lighting technology can integrate more flexibly with urban infrastructure. I am grateful to the Megaman Charity Trust Fund in Hong Kong and to Paviom in the UK for their support in enabling us to explore the challenges of making cities more sustainable.

JEREMY MYERSON
HELEN HAMLYN CENTRE FOR DESIGN,
ROYAL COLLEGE OF ART





CONTEXT

THE PROBLEM OF UNEVEN LIGHT DISTRIBUTION

As cities around the world compete for inward investment from tourism and business, there has been much focus on lighting public spaces, both indoors and out. Much of that investment has gone into illuminating popular tourist areas, heritage buildings and the commercial districts of the city. As a result, urban lighting is unevenly distributed.

While some areas are so brightly lit that the environment suffers from light pollution, many pockets of the city remain underlit at night. This limits local trade and use of public space, undermining economic activity and social cohesion, and leaving local communities literally and metaphorically in the dark.

This project set out to explore how a new lighting design strategy for these overlooked pockets of the urban fabric could help to create more sustainable cities. The research examines the possibilities for intelligent, energy-efficient lighting as a catalyst for the creation of more socially resilient and economically viable urban areas after dark, in which community ties are strengthened and new fields of possibility are opened to a wider group of residents.

By fundamentally rethinking how we light spaces, and by looking to balance energy efficiency with a sense of identity, we wanted to contribute to the formation of a new approach to sustainable lighting, where sustainability is understood comprehensively to include environmental, economic and social factors.

By reviewing the current conditions of the city at night, establishing a hypothesis about how this condition can – realistically – be improved, and then testing that hypothesis in the urban environment, we aimed to show that moves towards a more sustainable night-time city do not necessarily require massive investment, radical technology or new urban infrastructures.

This is a proposal for a new way to light the night-time city, set in the context of the ambition of cities to move towards a lower-carbon economy.

SOCIAL SUSTAINABILITY AND PLACEMAKING

In contemporary lighting design, the ability of light to generate or reinforce a sense of place has become almost as important as its fundamental role in making objects visible. As an element that is crucial to placemaking – the creation of a unique and recognisable character for a part of the city – lighting is recognised as a powerful tool.

In order to make a place that appeals to residents and visitors alike, it is hugely important that the local community should use and enjoy it. Social activity is what makes a space attractive. While placemaking is now an established part of any urban regeneration, and a lighting strategy will usually be submitted at the proposal stage, little real consideration is given to how these areas are used after dark. The city at night is an overlooked – and under-exploited – territory.

Despite the static nature of most lighting strategies, lighting the public realm is no longer simply about relieving the darkness. As urban designer Alex Cochrane notes: ‘Modern society has become fascinated with event culture and the visual spectacle.’ Lighting design is integral to this. Not only must lighting now be permanent, well rendered and carefully considered, but it should also enable a wide range of different uses. For a vibrant daytime area to be as welcoming at night, lighting must enable and encourage social interaction according to the ever-changing requirements of the inhabitants.

The development of an event-focused culture and the growth of the 24-hour city in the UK has interesting potential consequences. London has often been considered an introverted city; according to one observer in 1989, in London, ‘the life of leisure withdrew more and more from the street into private spaces and closed societies’, leaving the impression that ‘in comparison to other world cities London has only a very limited social life’.

However a change towards a more public urban life seems to be developing fast in British culture – and with it, the idea of the public realm at night as an extension of leisure space. Good lighting design has the potential to expand urban design as placemaking into the British night-time. The city at night is a different environment from the city in the daytime; a new realm of opportunity is opened for urban and lighting designers in recognising its different roles and meeting its diverse demands.

Part of what differentiates the night-time city from the daytime city is a very strong set of cultural norms and ideas held about the city at night. There is a sense – much more firmly ingrained in the British sensibility than in the European one – that the city at night is intrinsically bad. It is simultaneously a place of fun and frivolity and a dark destination for vice. And the irrational sense of danger that surrounds the city at night makes it out of bounds for certain groups in the urban community, such as families, women and older people.

If the city at night is to be a real public space, then it must be made accessible to all sectors of society. Lighting clearly has a role to play in making socially sustainable places.


Marché Couvert
LE CADET
OPERA CADET





Broken Light Project by Rudolf Teunissen. Luminaires create light columns and patterns on a street in Rotterdam, radically changing the feel of this once ignored district. Photo: Hans Wilschut

THE ROLE OF LIGHTING

Numerous social studies, as well as extensive anecdotal evidence, show that women and older people in particular tend to avoid city areas at night. To make a place that feels safe, more people must be encouraged to spend time there. By making public spaces more enjoyable, more people will occupy them, and they will seem less threatening. In this way, lighting has a crucial role to play in the creation of a more inclusive urban public life.

Although much current lighting practice is focused on advertising, traffic and crime prevention, the broader social and economic potential of lighting is recognised in British lighting standards. British Standard 5489-1:2003 states that ‘a function of lighting in urban centres, in addition to that of general safety and security, is to enhance the night-time environment. The provision of appropriate and attractive lighting can assist in stimulating trade and commerce’; lighting should also ‘attempt to encourage people to visit and make use of the facilities’.

But while social opportunities opened up by good urban lighting may be acknowledged in lighting standards, our explorations of certain pockets of the city revealed little evidence to suggest that local authorities consider this function a priority. Almost everywhere, vehicular traffic, commercial interests and the requirements of CCTV and crime prevention seem to dictate lighting policy.

After initial research, we concluded that to create a successful night-time urban realm that can be economically and socially sustainable, lighting design should:

- create well lit (but not necessarily bright) spaces to be used by the people who live in the city – rather than spaces designed mainly to be attractive to visitors;
- engage with communities to engender a sense of belonging and civic pride;
- consider the potential for changes to the lighting conditions (for example for a special event) and be adaptable to meet different requirements;
- encourage the use of outdoor space at night by local communities;
- challenge lighting codes and guidelines, which can be outdated and over-specify high levels of light;
- recognise that it is the quality of the lit environment that affects fear of crime, not simply the quantity of lux levels;
- design in shadows as part of the lighting strategy – the intensity and layering of shadow can be just as important in creating a sense of place as the levels of light.

VIRGINIA ROAD
HOCKER STREET
SWANFIELD STREET
ARNOLD CIRCUS
PALISSY STREET
ROCHELLE STREET
Boundary Gardens
Play Area
Posts
NAVARRE STREET
CAMLET STREET
LIGONIER STREET
CLUB ROW
MONTCLARE STREET
OLD NICHOL STREET
TURVILLE STREET
ST HILDA'S

RESEARCH METHODS

OVERVIEW

"A lot of the learning to work with light, since it doesn't form by working with the hands as clay does, is this working with light through thoughts".
— James Turrell, Artist

Although the world of lighting design has long been defined by strict codes and light level recommendations, our view is that lighting in the public realm is too diverse and complex to be successfully categorised empirically.

A row of flickering gas lights under a moonless midnight sky in Hyde Park can seem as bright to the adaptable human eye as a garish LED screen in an over-lit shopping street; apparent quality and quantity of light entirely depends on the context. So we set out to assess existing lighting strategies to establish how light can influence and redefine the city, before selecting a site on which to explore the effect of specific lighting conditions.

The research can be divided into two strands: investigation, which included a literature search, review of lighting technology, conferences, expert interviews, user workshops and community engagement; and exploration, which included walking and mapping the city, subjective analysis of lighting conditions, comparative studies, and concept development and testing of a new prototype lighting system.

Lighting design and the public realm covers a vast territory. Several mapping exercises were undertaken to navigate through it. These helped differentiate lighting for security, sustainability, identity, regeneration and community.

Early in the study, in order to filter new knowledge and focus the research, we looked for a compact urban site in London that we could analyse in detail – a site with local communities with whom we could engage in order to test our hypothesis about the social and economic impact of better lighting after dark. Our choice of site was the Boundary Estate in East London.











PROJECT SITE

THE HISTORIC BOUNDARY ESTATE

In order to understand better how pockets of the city are used at night, on-site research was crucial. The historic Boundary Estate in Shoreditch, East London, is particularly interesting as a research site. As London's first council estate situated in a rapidly changing part of the city, tensions between different groups of residents arise – especially at night. The Boundary Estate was chosen as the primary site for the study.

Its history is fascinating. In 1890 London County Council embarked on a slum clearance programme to clear the site of the famous Old Nichol in Shoreditch, East London – the setting for Jasper Morrison's novel, *A Child of the Jago*. On this site, between 1892 and 1899 the London Metropolitan Board of Works built the Boundary Estate – the first housing estate project in the UK[1], which was officially 'opened' by the Prince of Wales in 1901. Arnold Circus, a raised, three-tiered garden, stands in the middle of the site, built from the rubble of the existing slum. A bandstand was erected in the centre in 1910, and still stands today.

Although this regeneration was ostensibly carried out for the residents of the Old Nichol, very few could actually afford to live in the new flats, and almost all of them were forced to relocate out of the area. This was the first of many population shifts on the site.

[1] Single blocks had previously been built by state and charitable bodies such as Peabody, but no estate had been built by a local authority until the Boundary Estate



THE BOUNDARY ESTATE TODAY

The Boundary Estate today has a diverse community including a high percentage of British Bengali families. With an unusual raised circular garden at its centre, the estate has one of the few well-loved public gardens in the densely populated East End – a garden that has been revived over the past ten years by an increasingly engaged middle-class community.

The site is adjacent to the financial district and amidst one of London's busiest nightlife areas, yet it is a residential estate and within a conservation area. There are various tensions within the diverse community, which are compounded by the influx of partygoers in the short term and wealthy City workers in the long term.

The different communities use the area differently. At night, the estate's public realm is not a viable public space for some groups within the community – most notably older people, Bangladeshi women and girls – partly due to cultural norms, and partly due to a fear of crime. There is a high awareness of street crime, especially drug dealing and prostitution, and a real fear of violence (despite relatively low levels of violent crime) that discourages many people from leaving their homes after dark.

There is a primary school at the centre of the estate – in the winter it can be dark when parents (predominantly mothers) collect their children after school. Despite the high percentage of young people and children attending school and living on the estate, children are rarely seen playing out of doors in the evening.

The estate's central garden – Arnold Circus – was renovated in 2005. As part of the works, new street lighting was installed, but this is aimed primarily at the needs of CCTV cameras rather than people. There is enthusiasm for improving the estate's lighting from the community who recognise that good lighting has the potential to encourage more participation in the urban realm; it could also help to eliminate anti-social behaviour and so improve the perception and use of the area.

Many of these issues affect similar sites across the UK. Our research aimed to provide lighting strategies that are not only useful on the Boundary Estate but also applicable to many other under-lit urban estates. Enthusiasm for change from the most active members of the Boundary Estate community meant this site was particularly pertinent to investigate.



THE BOUNDARY ESTATE: LIGHT SURVEY

Despite many changes, the residents of the Boundary Estate are still predominantly council tenants, although many of the flats are now privately owned. By 2004 the public spaces of the historic Boundary Estate had fallen into disrepair. Arnold Circus, at the heart of the estate, was seen as a dirty and threatening place, with drug dealers and prostitutes swarming the area after dark. To counter anti-social behaviour on the site, the council's proposition was to cut down all the trees on the Circus and replace them with floodlights.

Appalled by the proposition, a small group of local people formed the Friends of Arnold Circus – a charity – and set about the rescue of this unique part of the East End's heritage, aiming to re-establish it as a resource for all.

Today, the Boundary Estate – with its unusual tall brick buildings, its verdant garden with still-standing plane trees, and its decreased crime rate – has improved dramatically. Yet it shares the same pressures as every other East London estate.

Overcrowded flats provide little privacy to younger members of the community, who are forced to spend their free time outside with little to do, leaving them vulnerable to the many temptations of the city. These young people are viewed by many residents as a threatening presence on the streets, however innocent their activity.

There are numerous public spaces around the estate, but after dark the lighting does little to encourage their use. Outside Clifton House, for example, is a small residential square visible from two roads leading to the Circus that would suit a number of quiet activities after dark, despite its decaying facilities and uneven terrain.

The Arnold Circus bandstand is a recently restored and listed social area, raised at the centre of the estate. Unfortunately the 12 benches surrounding the bandstand are in the dark, a few lit only by the glare of a floodlight necessary for CCTV cameras to operate. And the self-contained Old Nichol Street playground is more popular at night for drug dealing than for playing according to locals, although it is well placed as the focal point for neighbouring flats.

Across Tower Hamlets – the borough in which the Boundary Estate lies – there are several traces of generous investment in public space. Within the estate itself, there are four fully furnished playgrounds, all of which are abandoned. Not all of these failures can be attributed to poor or nonexistent lighting, but it is clear that without sufficient illumination the short winter days render these costly investments useless.

The decline of these valuable facilities becomes a slippery slope. When properly lit, these areas are a welcoming asset to a community, providing a safe place to play for local children and their families. But when the lighting fails, these dark, sheltered spaces become the territory of drug dealers and sex workers.

Evidence from schemes within Tower Hamlets suggests that the problem in providing decent local lighting is not purely financial. An approach to lighting that is abstracted from the real needs of residents, combined with a lack of suitable luminaire designs, has simply resulted in lighting that is unsuited to this demanding urban environment.
















Mckenzie













COMMUNITY ENGAGEMENT

A DIVERSE COMMUNITY

Despite its proximity to the financial heart of the capital, the Boundary Estate actually borders the two most deprived areas of London. As with many similar areas around the world, the conjunction of wealth and poverty inevitably leads to tension.

The Boundary Estate has a varied community. Parts of this community are very active, but the area as a whole suffers from what appears to be a cultural divide. There are three main groups residing in the area: East Londoners, mainly older people who can trace their family history back many generations; Bangladeshi and British Bangladeshi families who have lived in East London for several generations and maintain a strong Bengali culture; and the professionals and artists who have moved into the area more recently.

There is some tension between these groups, especially towards recent incomers who are held responsible for the dramatic changes in the area over the last decade.

To understand how the estate is used by the community at night, we investigated across a spectrum of gender, age and culture. We were particularly interested in how a lighting strategy could potentially enable participation by those who are often excluded from public spaces at night (for security, cultural or mobility reasons) and whether exclusion was self imposed or otherwise.

Our guides included Doris, 79, who grew up on the Boundary Estate, has lived in the area all her life and no longer leaves her home after dark; the Bandstand Boys, a group of young men in their late teens and early twenties who hang around the bandstand in the evening and have written to the council to request floodlighting for the local football pitch so that they can play after dark; and the Boundary Women's Project, a dynamic group of predominantly Bengali British mothers with young children who meet at St Hilda's Community Centre.

CITIZEN WORKSHOPS

We held several workshops at St Hilda's East community centre to include groups from the Boundary Estate: the Boundary Women's Project, the Older People's Group and the Bengali Men's Project. Each session followed the same basic format, amended or adjusted to suit the specific requirements of each group.

The aim of the workshops was to find out how people use urban space after dark and how they feel about it. Word association games, discussions and mapping exercises opened up ideas about the estate at night, including the types of people who are present. Participants were asked to draw or describe the area at night, identifying emotional as well as physical landmarks. They drew negative aspects (such as dog fouling, noisy clubs, drug dealers) as well as positive ones (the gardens, delicious curry smells, their homes).

The final part of the workshop was an imaginative challenge. The groups were asked: if Arnold Circus was a room in their house, which room would it be and why? They were also invited to complete a drawing of a lamp post to indicate what they would like a lamp post to do if anything were possible (for example, charge up electric cars or give directions).

WHAT WE DISCOVERED

The workshops generated a number of significant findings:

- The Bengali men and the elderly group were very concerned about violence and muggings on the streets at night, to the extent that they rarely left their houses after dark – members of the women's group were more concerned about the clubbers from the party scene in Shoreditch
- The division between the Bangladeshi community and the 'uber trendy' white community was so distinct in the minds of the women that in one instance it was charted on a map, indicating a clear set of territories
- There was consensus on where bad things happen on the estate – these locations were widely known and avoided – and a general concern about sex workers and drug addicts in the area
- The diversity of the area and the proliferation of restaurants were seen as positive features by the Boundary Women's Group in particular
- There was general agreement that there needs to be more considered lighting on the estate
- The primary concern was with safety and security.

The insights from the workshops were mapped to create a picture of the emotional and physical geography of the site at night. This was then used to identify potential sites for improved lighting.

Comments about light that were made during the workshops were analysed in detail and categorized with reference to either the social environment or built environment at night. It was interesting to discover that most of the comments referred to the social environment – this supported a working hypothesis that the social environment is as important to creating a sustainable night-time city as factors relating to the built environment.

Through our engagement with the community, through interviews, readings of reports and exploration of the estate after dark, it became clear that much of the locality is dominated by – or perceived to be dominated by – gangs of threatening youths. Their presence discourages other people (especially women and older people) from using these spaces after dark.




Bethnal Green
BRICK LANE

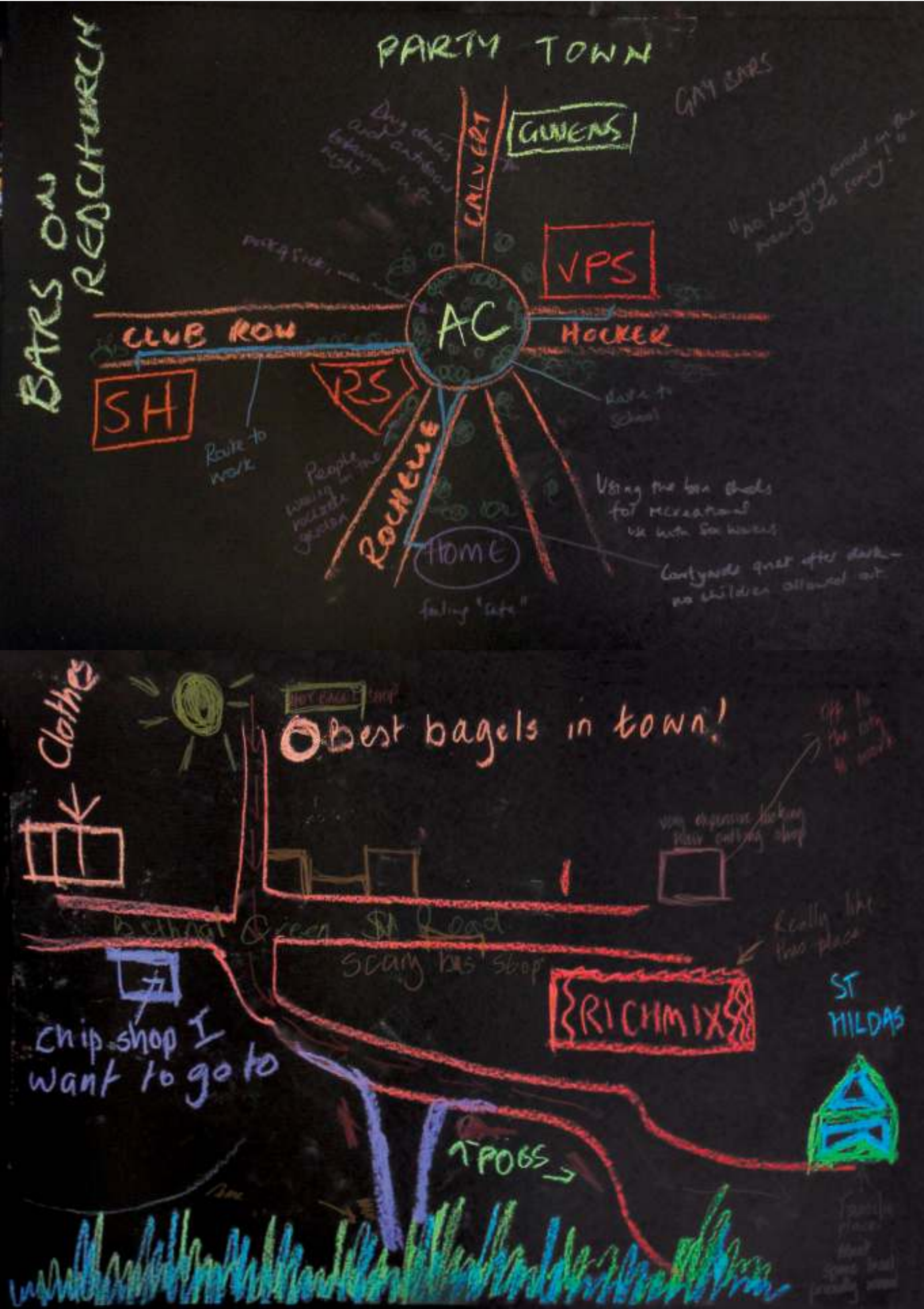
BARS ON REDCHURCH
PARTY TOWN
GAY BARS
GUNENS
CALVERT
VPS
AC
CLUB ROW
HOCKER
SH
RS
Route to work
ROCHELLE
HOME
feeling "safe"
Using the bin sheds for recreational use with fox hovers
Contyards quiet after dark - no children allowed out
Clothes
Best bagels in town!
Bethnal Green St Road
scary bus stop
Really like this place
RICHMIX
ST HILDAS
chip shop I want to go to
POGS

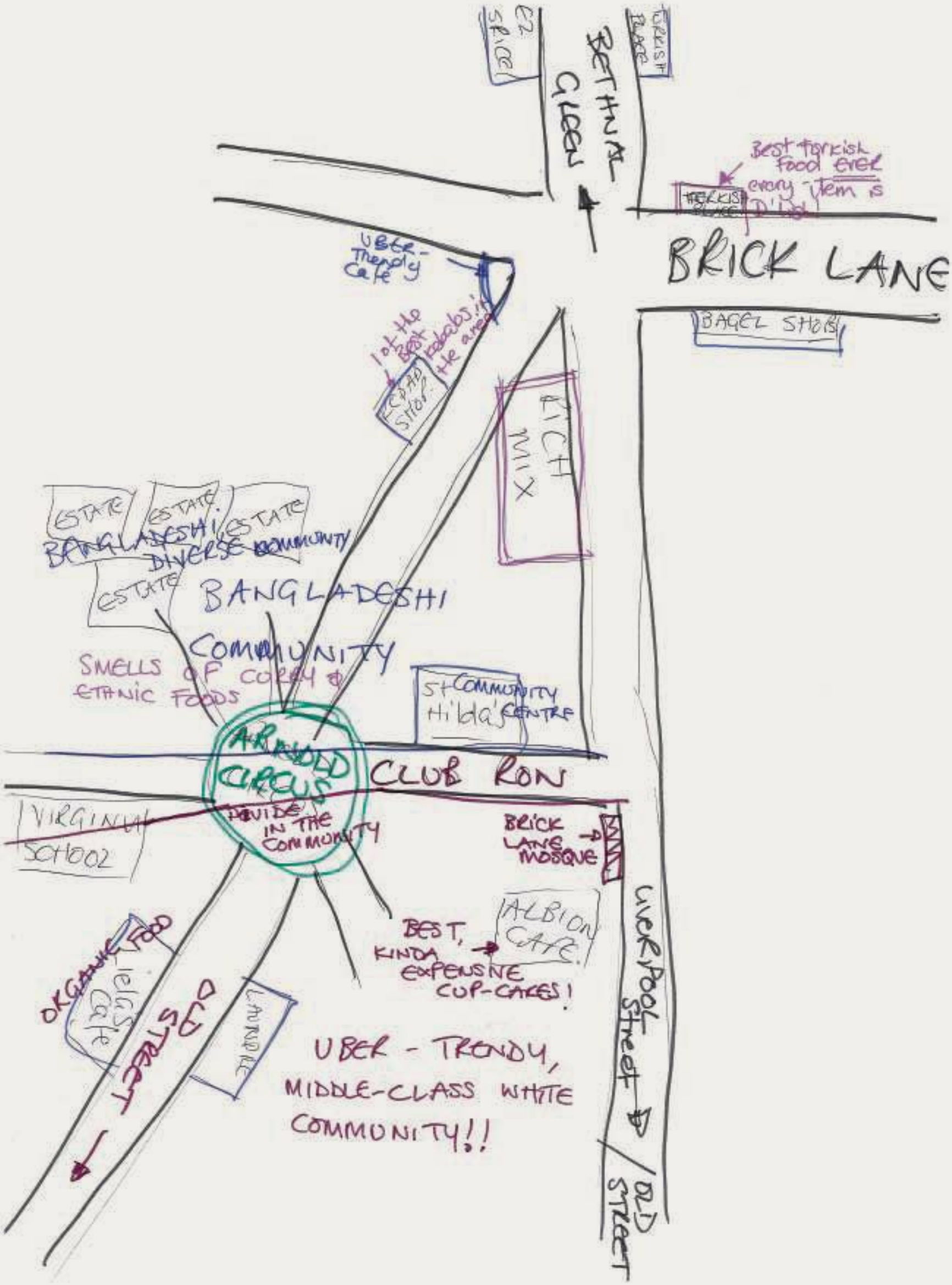

E2 SPICE
TURKISH PLACE
BETHNAL GREEN
Best Turkish Food ever every item is D'lish
TURKISH PLACE
BRICK LANE
UBER-Trendy Cafe
BAGEL SHOP
1 of the best kebabs in the area
FEDAD SHOP
RICH MIX
ESTATE
ESTATE
ESTATE
ESTATE
BANGLADESHI DIVERSE COMMUNITY
BANGLADESHI COMMUNITY
SMELLS OF CURRY & ETHNIC FOODS
ST COMMUNITY Hilda's CENTRE
ARNOLD CIRCUS
CLUB RON
DIVIDE IN THE COMMUNITY
VIRGINIA SCHOOL
BRICK LANE MOSQUE
ALBION CAFE
BEST, KINDA EXPENSIVE CUP-CAKES!
ORGANIC FOOD
Ielas Cafe
OLD STREET
LAUNDRE
UBER - TRENDY, MIDDLE-CLASS WHITE COMMUNITY!!
LIVERPOOL STREET
OLD STREET



PROJECT HYPOTHESIS

NIGHT-TIME NEIGHBOURHOOD NETWORK

The Night-Time Neighbourhood Network is a proposal for a lighting framework that could open up paths through a darker city consuming less energy, via well-lit nodes of activity and participation.

Fear of going out alone after dark has a huge impact on people's lives in terms of the ability to engage in employment, adult education, civic and community participation and social and leisure activities.

The public realm after dark could provide opportunities for the Boundary Estate's diverse communities to come together. Instead the poor social environment of the evening restricts access to local facilities, shops and public spaces for many in the community, especially the elderly, women and Bangladeshi men. This in turn has a negative impact on the local economy, especially in the dark winter months.

The Night-Time Neighbourhood Network (NNN) would create a local network of brightly lit nodes in an area, each node visible to the next, inviting and encouraging social interaction at key points throughout the neighbourhood. All members of the community would be encouraged to use these well-lit spaces and interact with their neighbours, fostering a sense of community.

Between these well-lit public spaces, the street lights could be dimmed, saving energy and money and reducing glare. The proposed nodes would encourage a heightened sense of natural surveillance and benign or friendly occupation, rather than the current situation with the harsh glare of security lighting.

These nodes could be located at important points in the urban landscape – at amenities such as playgrounds or benches or at transport interchanges such as bus stops.

THE GREAT BALLOON SWAP

In order to test this hypothesis, a temporary lighting event was planned as an example of how a new node in the Night-Time Neighbourhood Network might be inaugurated and how a community might be drawn together after dark.

This event, the Great Balloon Swap, was devised to announce a hypothetical lighting node at Arnold Circus, the circular bandstand and gardens at the centre of the Boundary Estate. Following community consultation, it was decided to create the event with coloured LED balloons.

The event was planned as a prelude to the annual Arnold Circus Swap and Share Picnic – a community party to which everybody is encouraged to bring food, drink and skills to swap and share. The idea was to hand out balloons on the bandstand in the early evening to residents and passers by. The balloons were all white and secured by white ribbon. Inside each balloon was a single coloured LED.

In exchange for the balloon, participants were asked to draw their own face on it and have their picture taken to capture the diversity of the community. Participants were then asked to read eight statements about the city at night, which had been put up around the eight sides of the bandstand, and attach their balloon to the one they most agreed with. The statements read: ‘The city at night is for....dancing / sleeping / drinking / walking / working / chatting / reading / shopping...’












LIGHTING EVENT

LOCAL LIGHT NODE

Participants in the temporary lighting event at Arnold Circus were encouraged to swap their balloons with each other. The gradual build-up of balloons tied to the bandstand attracted more and more participants and as dusk fell at about 9pm, the LEDs were switched on and the bandstand was lit up dramatically.

As the evening progressed, the bandstand became a lively graph of how people wanted to use their city in the evening – dancing and chatting quickly emerged as more popular activities than reading and sleeping.

Residents and children came out to see what was going on; clubbers on their way to the bars of Shoreditch stopped to take part; a group of boys – often considered so threatening when they hang out at the gloomy bandstand – enthusiastically illustrated the balloons; dog-walkers and smokers stopped and lingered at the bandstand as the night fell and the balloons started to glow.

Coloured spotlights kindly lent to the event by Paviom flooded the surface of the gardens and the bandstand at the centre of the estate became a lantern animated by the faces of the community.

The experiment successfully demonstrated how to create a brightly lit node of social participation within a darker environment. In doing so, it suggested that the solution to under-lit urban areas is not simply to increase lighting levels to match those of the city's commercial districts and tourist attractions.

Instead, the darkness of the night can be respected and enjoyed – and the area can be made to feel safer and more attractive at night – by instigating a light skeleton or network of illuminated local amenities and infrastructures.

The Great Balloon Swap helped us understand how the Night-Time Neighbourhood Network might work, by responding directly to the existing conditions of each locality. The nodes in the lighting network would act both as way finding points and as secure rest spaces in each area, where an increased footfall and social interaction might provide natural surveillance in place of CCTV.



DESIGN DEVELOPMENT

DEFINING THE BRIEF

Following community research and on-site investigation, the project aimed to take direct action to improve the estate after dark by developing and prototyping a new lighting system. The Great Balloon Swap showed that a lighting event could create a temporary node that brings together a diverse population; the next step was to test a more permanent installation.

We decided that the most valuable output would be a lighting kit to provide the flexibility and sensibility that most contemporary urban lighting masterplans do not – a versatile set of parts to enable councils and local communities to collaborate in lighting key facilities for use after dark.

Key findings from the on-site research helped to shape the design brief. We took note that a well-lit facility can transform an area that is avoided at night into one full of activity; groups engaging in social activities can provide reassurance for residents; and the blanket coverage of street lighting ignores the character of spaces and can actually discourage people from venturing outdoors after dark.

This lit steel staircase at a London underground station is assembled from a kit of parts. An example of lighting integrated into urban infrastructure.

In response to these findings, we devised a brief to design a new system of urban lighting, covering the design of the hardware, the technology to monitor and adapt the light, and the means to implement such a lighting system. The brief can be summarised as follows:

- To develop a flexible luminaire ‘kit’ that will facilitate diverse activities and adapt to a range of environments
- To equip the lighting system with technology that enables it to acknowledge environmental factors such as human presence, existing light and time of day
- To develop a way to distribute and maintain the luminaires that promotes communal ownership and responsibility.

TUBULAR INFRASTRUCTURE

A study of the local vernacular in and around the Boundary Estate revealed a popular construction method widely used in the public realm: scaffold tubes and clamps. In fact, these elements are so widespread throughout the city that they almost become invisible.

Tubes are commonly employed to construct facilities such as handrails, bike racks, garden delineators, gates, fences, barriers, notice boards and many other pedestrian-scale public facilities. As a tool to impact the urban realm, these tubes have enormous potential given all the places across the city in which they are installed.

Tube clamps are a common solution for the construction of tubular structures. A tube clamp system securely joins standard sizes of structural steel tube into almost any configuration imaginable. These clamps require no welding, threading or bending – so no 'hot-work' permits or special tools are required – and they are the most popular means of constructing with tubes.

Tube clamps are a flexible system that can accommodate site variations and do not require specialist labour. Local authorities are especially familiar with this means of construction and many stock their own library of parts. Tube clamps are generally made from galvanised cast iron but versions are available in aluminium.

Tube clamps and scaffolding have become increasingly popular in recent years, with contemporary applications ranging from furniture and shop fittings to sports equipment and outdoor shelters. All of these factors indicate that tubes and clamps might make the ideal tools for implementing a new lighting strategy in urban areas.










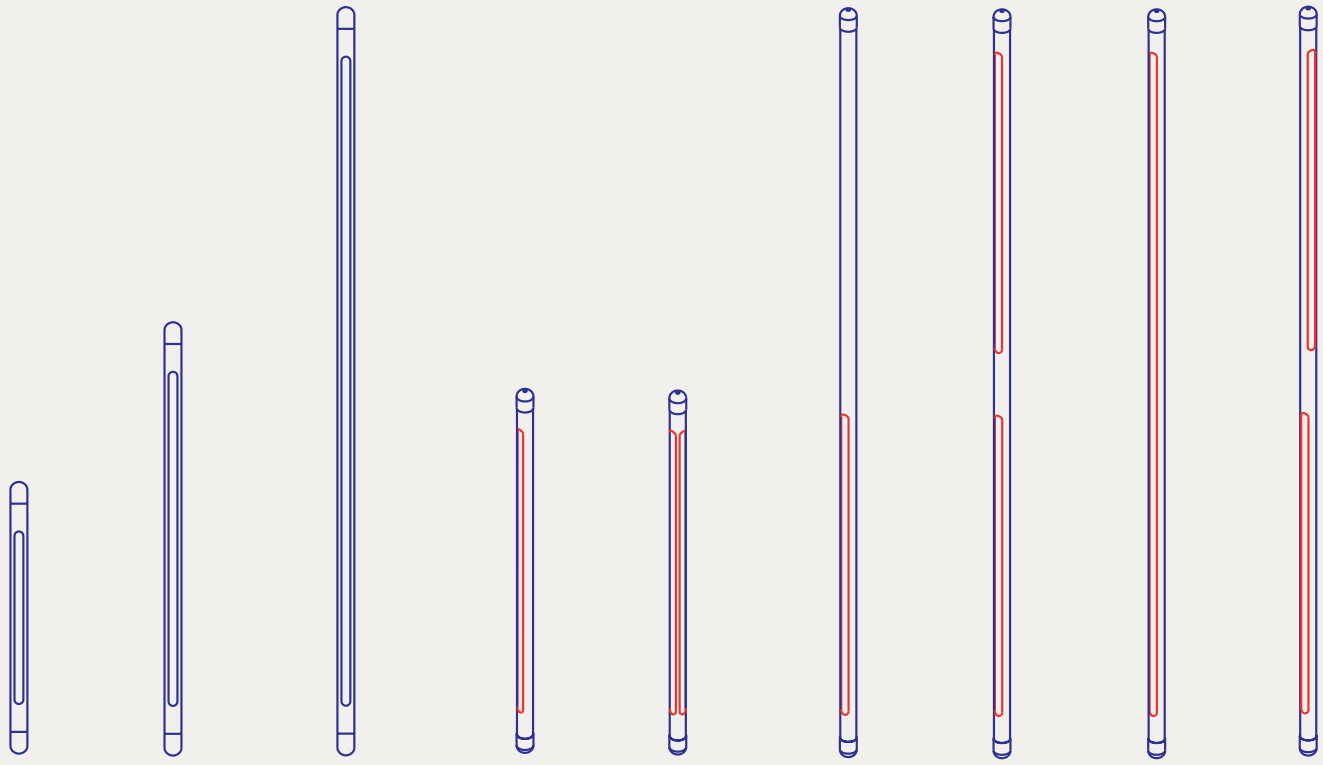

Tube length and window arrangement

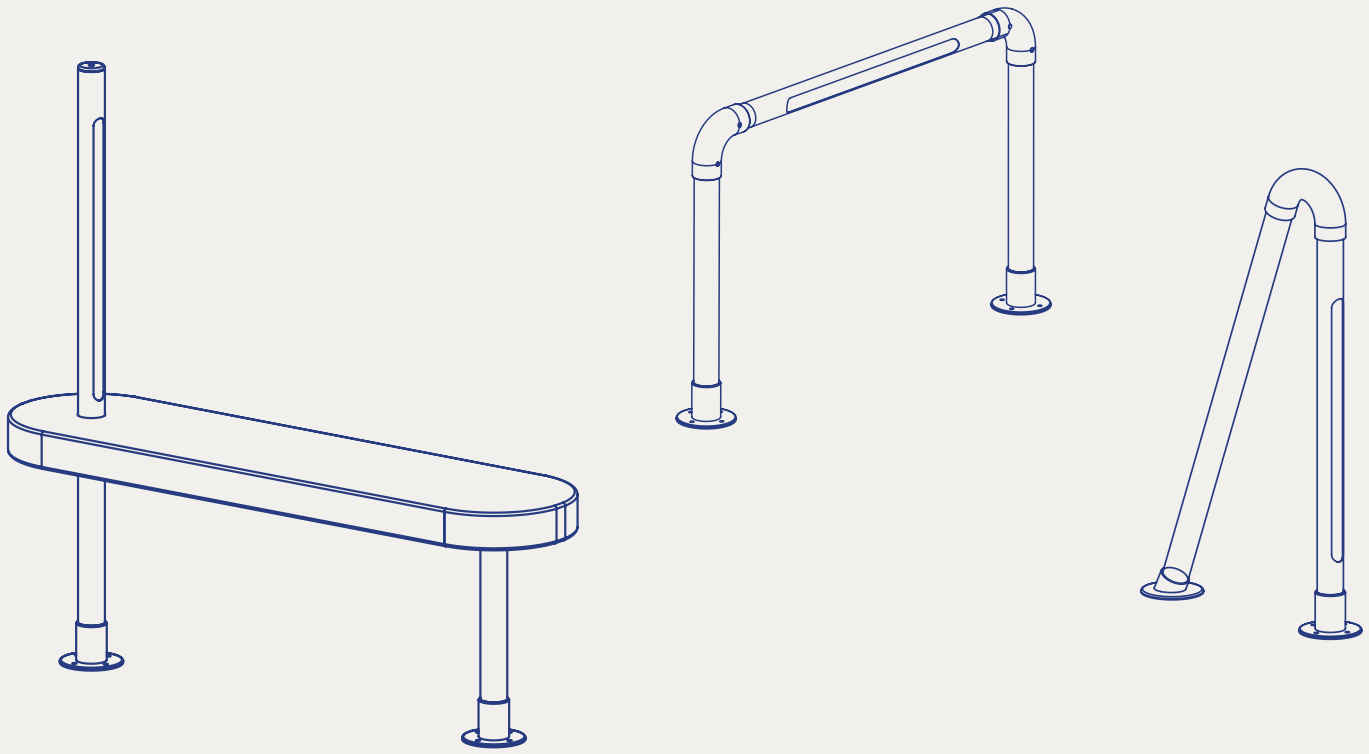

Possible setups

DESIGN CONCEPT

MAKING LIGHT TUBES

By adapting a standard scaffolding tube to house an LED strip, the extensive library of tubes and clamps becomes a toolbox with which many permanent luminaire set-ups can be designed. It is a versatile system with vast potential – light tubes of varying lengths can be designed in such a way as to be hard wearing, waterproof and cost effective.

LED (light-emitting diode) technology enabled us to create a compact, low heat, locally relevant and economically viable lighting solution. The result is a flexible, human-scale system that can become a freestanding luminaire, an addition to existing infrastructure or a light-producing component in a tube-built object. Here are some examples:

- *Existing bench:* a bench can be lit from either side to cast light on and around it
- *New bench:* a bench can be constructed using one or more light tubes as structural components
- *Handrail for stairs:* the light tube can become a handrail providing light for stairways
- *Handrail in tunnel:* the light tubes can become handrails for tunnels that also provide light
- *Overhead lighting:* the light tubes can be constructed into an overhead luminaire
- *Ground lighting:* the light tubes can be installed at ground level to delineate a path or garden
- *Football:* two light tubes can form the uprights of a goal
- *Cycle rack:* a light tube can create a dual purpose facility.

To make the first prototypes, the window in the external steel tube was milled. But when produced in larger numbers, the window in the tube can be cut using a water-jet or laser cutter, thus reducing the unit cost of the light tube to as low as £5.











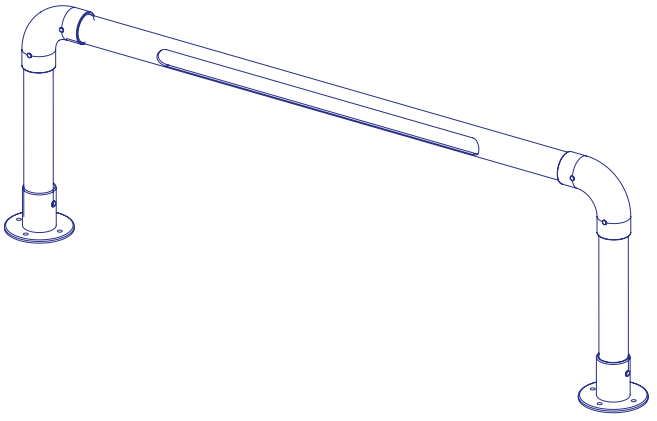

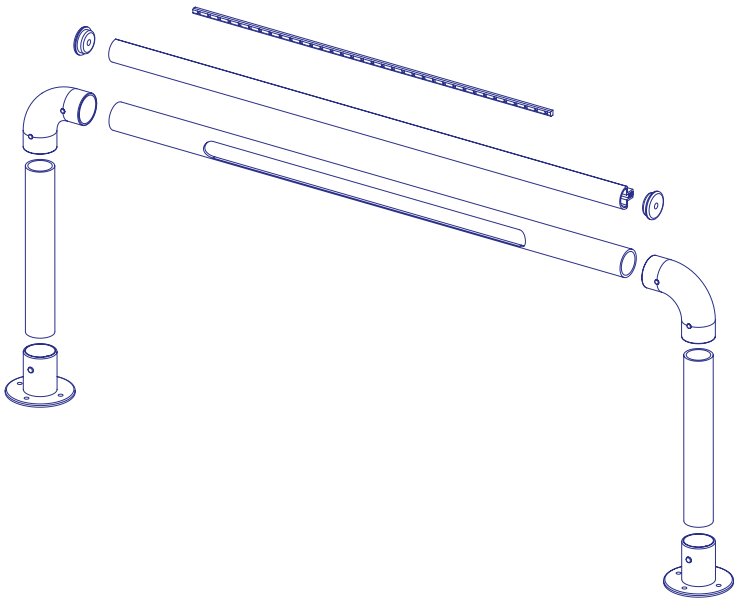

FIRST TESTS

The first tests were conducted to discover how residents would react to the tube lights, and how the lights would perform in their intended environment. The lights were tested for three hours in total.

At each set-up the research team started by observing at a distance before moving closer as time passed to engage with residents, encouraging them to highlight on a map facilities and spaces that they would like to use after dark. Residents were able to highlight sections on the map and post their request in a box site next to the lit facility.

During the tests the lights performed well but there were instances where a light diffuser or shade would have helped to create a more effective and pleasantly lit environment. The LED strips produced a cool white light, which appeared somewhat cold in the London climate and the project decided to conduct future experiments with warmer LED strips.

Aesthetic finishes also came into focus: in green spaces such as the listed Arnold Circus, the lights needed to feel less industrial in order for them to blend into their surroundings.

Passers-by were curious about the installations but reluctant to settle around the lights and highlight areas on the map. This was perhaps due to the temporary feel of the installations, which ran off a leisure battery with unburied wires and cameras set up nearby.

However verbal lighting requests were made by young male residents, who later showed us a very dark sports pitch and explained that they had barely used it since it was built. One said that without lighting or goals the pitch was ‘pointless’ as it was too dark to play football after school....



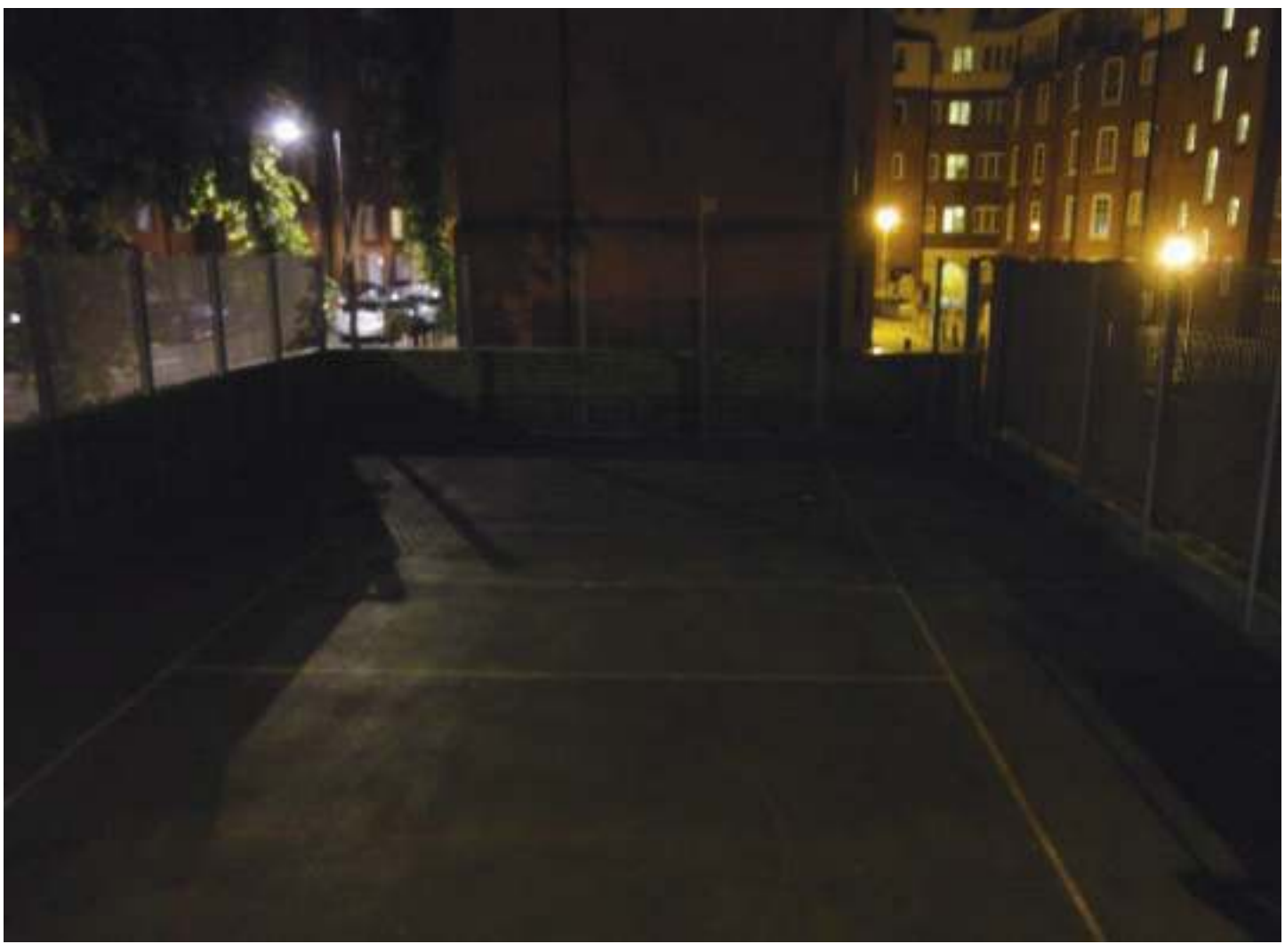

DESIGN INSTALLATION

THE SPORTS PITCH

We took the boys' request to Tower Hamlets Homes and the project was commissioned by the council to build a pair of self-illuminating goal posts made from light tubes for the disused Old Nichol Street sports pitch on the Boundary Estate.

The sports pitch is a self-contained play area built in 2009. It is well placed with flats overlooking it and their entrances nearby. But since being installed, this costly investment has barely been used; by 6pm in November it is so dark one can barely make out the trees – the only light source is provided by glare spilling over from a neighbouring shop.

The pitch is an ideal size for five-a-side football but, according to local residents and shop owners, its most frequent users are drug dealers, prostitutes and late night drinkers who use it as a toilet.

Tower Hamlets Homes, the local Police and community groups all got behind the idea of installing a permanent light tube set-up as the first real node in a Night-Time Neighbourhood Network, turning a venue for anti-social behaviour into a useful amenity for local boys to play.



SETTING UP

It was agreed that the installation should not attempt to uphold the same lighting standards as a floodlit sports pitch. The lighting system sets out to render a public facility usable and enjoyable after dark. Although the goal posts are of regulation five-a-side dimensions (3.66m x 1.22 m), it is clear that no proper league football games will be played here.

Our intention was simply to create enough light for informal football matches to take place after dark and for these matches to be fun.

The only light sources come from the two goals made from light tubes – all the tubes face in to give the illusion of two boxes of light. These are designed to provide enough light in and around them in order to use the pitch after dark, yet the light is directed in such a way so as to not disturb the neighbours. The goals are also on a timer that cuts out at 11pm so that games do not go on deep into the night.

The response from gangs of older youths watching us work with an electrician to assemble the goals and power the set-up was initially critical and confrontational. What were we doing with their space? But once they were invited to participate in the project by attaching the nets, the mood changed.

And when the power was turned on for the first time, the boys became increasingly upbeat. One ran home to get a football and within minutes of the installation being completed a football match was underway. These boys were later put in charge of minding the goals and maintaining the nets.









RESULTS

Since installing the self-illuminating goals on the pitch, this previously unused facility has seen a new lease of life. A large number of the local boys now play football there in the evenings, whereas before they sat in the dark on the bandstand in Arnold Circus with nothing to do. On some evenings families watch the boys play from a nearby bench. Their feedback has been highly positive and they have put a petition together of their own accord to get other self-illuminated elements installed nearby.

As a practical lighting exercise, the prototype system set out to prove our hypothesis about lighting the social environment at night. Does the increased activity on this sports pitch make the area feel safer at night? And does this in turn encourage residents out of their homes after dark?

Only time will tell if this is the case, but as one node in a potential Night-Time Neighbourhood Network, the Old Nichol Street sports pitch marks a first step in demonstrating an alternative approach to lighting local urban communities who are so often overlooked within the infrastructure of the city.

CONCLUSION

The project set out to discover how lighting overlooked pockets of the urban fabric could help to create sustainable cities, and how urban communities could optimise their social and economic interactions by expanding into the leisure space of the evening. Could lighting be a catalyst for the creation of more accessible, resilient and viable urban areas after dark? What were the real needs of a community at night, and how could light help strengthen community ties and open fields of possibility to a wider group of residents?

Through academic, community-based and practice-based design research we have identified, developed and tested an answer to these questions. We believe that our solution is just one of many options available to local authorities – and we encourage them to treat every site across every city on an individual basis, with the needs of local residents prioritised in any urban lighting brief.

As advances in lighting continue to focus on reducing costs and saving energy, it is easy to forget the people for whom light is intended. We have come a long way from high voltage, exothermic light sources elevated high above our streets; after more than a century of electric light, recent technological advances have equipped us with technologies capable of genuine human scale and inclusive lighting solutions.

With LEDs we can now diffuse, distribute and target light to individuals and groups rather than just flood areas with illumination; and with modern communication tools we can consult, listen and engage with users rather than just inflict lighting schemes on them. In the age of LED illuminated environments it is ever more important to highlight the city at night – to give the urban realm its own characteristics – rather than just attempt to extend the day into the night.

By challenging age-old lighting conventions and reassessing user needs, we believe we can work towards lifting local urban communities literally and metaphorically out of the dark.



MEGAN CHARNLEY

Megan graduated from the Architecture Department at the Royal College of Art in 2010. Her final project – The Railway Wikiversity – was featured in Blueprint Magazine's Top 50 Student Design Projects 2010. Before starting her Masters course she gained a First Class degree at Cambridge University, and spent two years working in architecture practices, the first year in Barcelona and the second freelance in London. She was a Helen Hamlyn Research Associate, working on the In The Shade project with Megaman, from October 2010 to November 2011.



TOM JARVIS

Tom graduated from the Design Products course at the Royal College of Art in 2011. His final projects – Tools to Service an Orchestra and Inflatable Double Bass Case – were awarded the Conran Award for Design and featured in Terence Conran's exhibition at the Design Museum, The Way We Live Now. Before starting his Masters course, Tom studied Fine Art at the University of Wales Institute Cardiff and worked for the London-based landscape design firm Terranova Landscapes. As well as his work at the Helen Hamlyn Centre for Design, Tom works freelance for a number of international clients developing tools for professions with high injury rates.

BIBLIOGRAPHY

Brandon, C., Welsh, B.C. & Farrington, D.P. (2008) ‘Effects of Improved Street Lighting on Crime: A Systematic Review’ Home Office Research Study 251

Cavanagh, C. (1998) ‘Making Safer Places, Women’s Design Service’

Davis, W. (2008) ‘Safety in Public Urban Space: The Work of Women’s Design Service’ London

Dearlove, M. (2004) ,Blighted Landscapes: The Narrative Role of Street Lighting in Urban Regeneration, Final report, Helen Hamlyn Centre, Royal College of Art, London

Dobbs, H. (2002) ‘Light.urban.landscape: Lighting Strategy for Regenerating the City’ Final report, Helen Hamlyn Centre, Royal College of Art, London

Mitchell, D. (2003) ‘The Right to the City: Social Justice and the Fight for Public Space’ New York

Dutson, C. (2010) Light Volumes, Dark Matters, Helen Hamlyn Centre, Royal College of Art, London

Williams, F., Scott-Baxter, J. & Elster, C. (eds) (2005) ‘Friends of Arnold Circus, Conservation Strategy’

Fujiyama, T., et al. (2003) ‘Investigation of Lighting Levels for Pedestrians – Some questions about lighting levels of current lighting standards’ UCL

Gehl, J. (2010) ‘Cities for People’ Island Press, Washington

Jacobs, J. (1961) ‘The Death and Life of Great American Cities’ Vintage Books, New York

LUCI, Charter on Urban Lighting, *Promoting a Culture of Sustainability in Lighting*, Lighting Urban Community International, 2009

Lynch, Kevin, *The Image of the City*, Harvard University Press, Cambridge Massachusetts, 1960

Marianne de Laet and Annemarie Mol, *The Zimbabwe Push Pump, Mechanics of a Fluid Technology*, London, 2000

Mende, Kaoru et al, *Lighting Design for Urban Environments and Architecture*, Rikuyosha, Japan, 2005

Newman, Oscar, *Defensible Space*, New York, 1972

Phillipson, C, Ahmed, A and Latimer,J., *Women in transition: A study of the experiences of Bangladeshi women living in Tower Hamlets*, Bristol: The Policy Press, 2003

Schlor, Joachim, *Nights in the Big City : Paris, Berlin, London, 1840-1930*

Tanizaki, Junichuro, *In Praise of Shadows*, Sedgewick, 1977



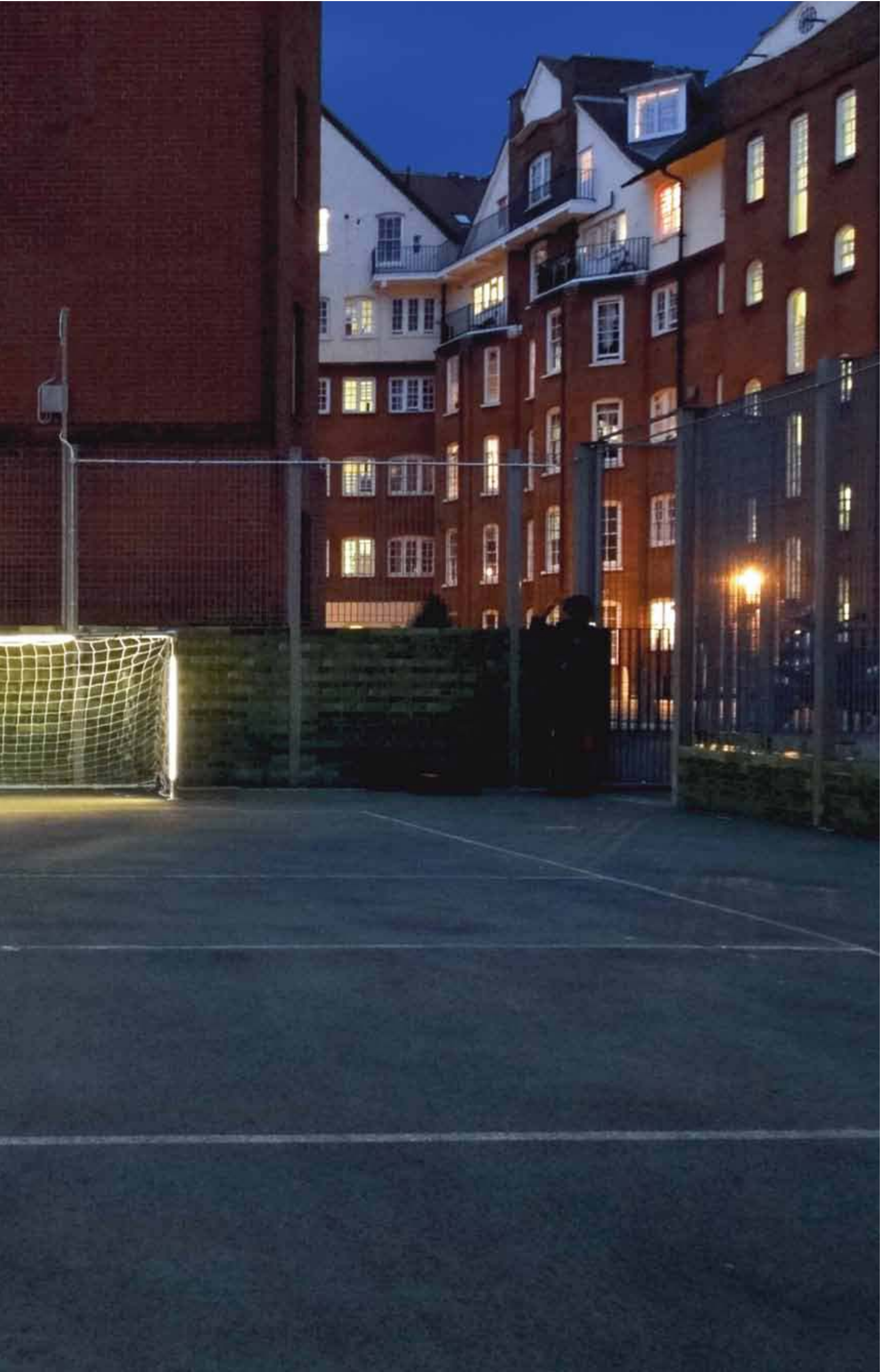

ACKNOWLEDGEMENTS

In the Shade: lighting local urban communities
© 2012 Helen Hamlyn Centre for Design
Royal College of Art

ISBN 978-1-907342-63-9

British Library Cataloguing-in-Publication Data. A catalogue record for this book is available from the British Library. All rights reserved. No part of this publication may be reproduced, stored in a retrieval system or transmitted in any form or by any means, electronic, mechanical, photocopying, recording or otherwise, without the prior consent of the publishers.

Published by:
Helen Hamlyn Centre for Design
Royal College of Art
Kensington Gore
London SW7 2EU

+44 (0)20 7590 4242
hhcd@rca.ac.uk
www.hhcd.rca.ac.uk

Design: Lottie Crumbleholme

Thanks to: Friends of Arnold Circus, Tower Hamlets Homes, St Hilda's East Community Centre, Megaman Charity Trust Fund, Paviom.

Printed on Revive 100 Premium White Uncoated, a recycled paper made from 100% post consumer waste.

Why are some areas of the city over-illuminated, but other pockets of the urban fabric left in the dark? How can we create a more sustainable and inclusive approach to outdoor urban lighting that allows local inner-city communities to enjoy the social realm at night? This publication describes a research project in lighting design on the Boundary Estate in East London, undertaken by Helen Hamlyn Research Associates Megan Charney and Tom Jarvis from the RCA. In its engagement with diverse communities and its design of a new system, it proposes a radical new way to make neglected corners of the city more liveable.